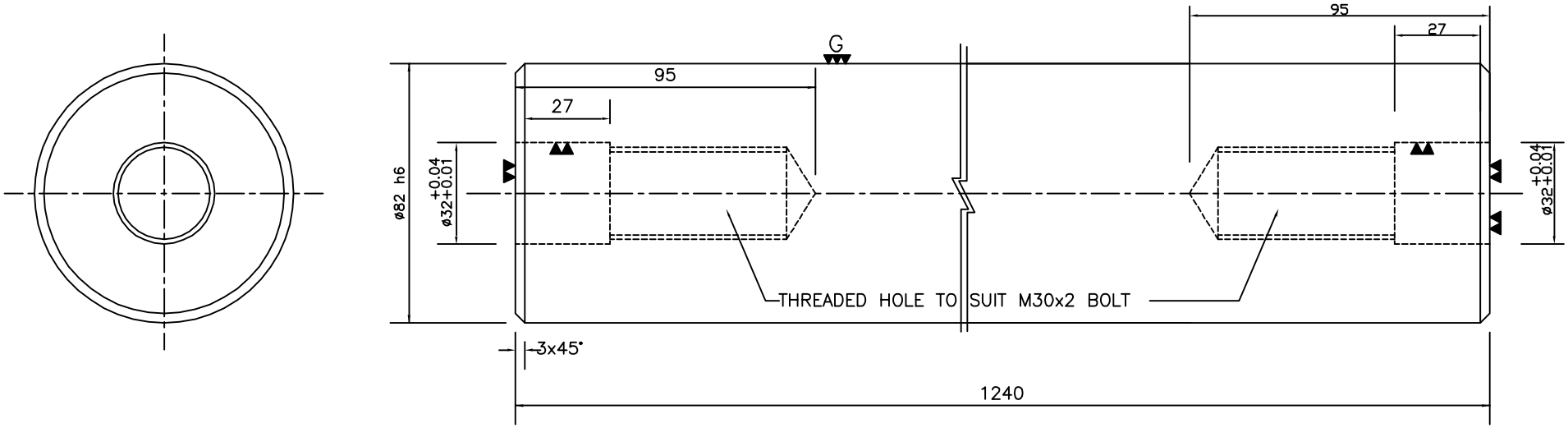

3. MATERIAL COMPOSITION AND OTHER DETAILS REFER TO RDSO'S SPECIFICATION No.TM/HM/6/192-REV-1
2. ALL SHARP CORNERS TO BE CHAMFERED.
1. ALL DIMENSIONS ARE IN MILLIMETRES.

N O T E S	SPECIFICATION	SCALE	ALT	DESCRIPTION	AUTHY
	RDSO SPECIFICATION No. TM/HM/6/192 REV-1	2:1			

R. D. S. O.

GUIDE ROD FOR TAMPING UNIT

(PART No. E-6203) (PROVISIONAL)

CANC./SUPED REVED.

DRG. No. TM/0505-REV-1